GUVI Calibration and Characterization

Dr. Larry J. Paxton

Johns Hopkins University

Applied Physics Laboratory

Laurel, MD 20723

(301) 953-6871

(301) 953-6670 fax

Calibration Goals for SIS

- **Understand the instrument.**
- **Be able to convert measured counts/pixel on-orbit into accurate radiances from a known emission volume.**
- **Be able to understand on-orbit stellar calibrations.**

OCF OVERVIEW
Facility

Schematic diagram of the Optical Calibration Facility

- **shaded blocks indicate detachable modules**
- **calibration beam is indicated by dashed line**

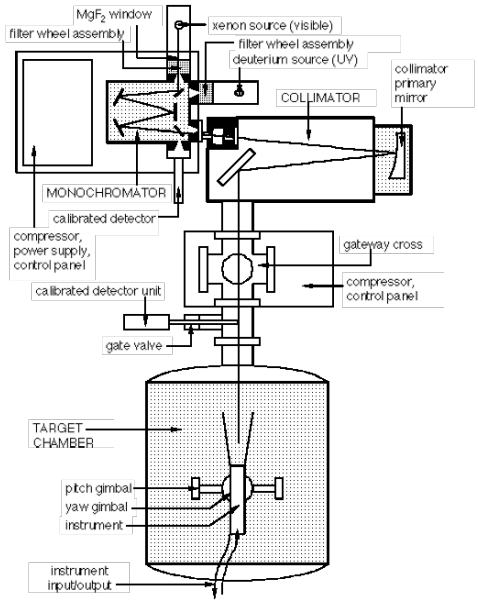

OCF OVERVIEW
Monochromator

The OCF monochromator

- **a source lamp provides input**
- **a beam monitor checks the output**

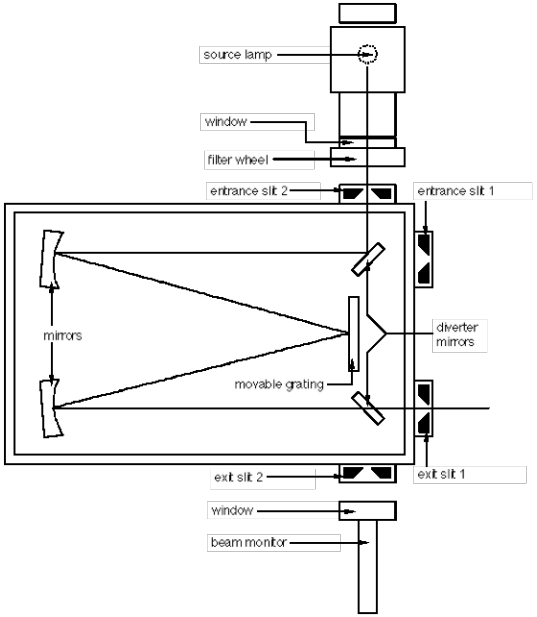

OCF OVERVIEW - Collimator

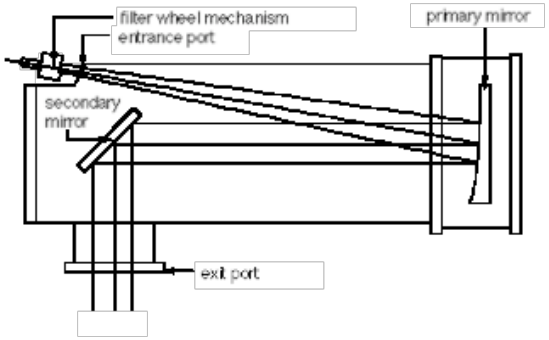

The collimator employs two mirrors to parallelize the light and direct it through the exit port. Light first strikes a parabolic primary mirror, which has a diameter of 8 inches (20.32 cm) and a focal length of 56.35 inches (143.13 cm). The parallel rays strike a flat secondary mirror oriented at 45° to the parallel beam. Micrometer mounts secure both mirrors and allow the precise alignment of the input and output beams. (Because of the precision required, these adjustments consume most of the time required to set up the complete OCF for calibrations.) Both mirrors have a coating of $AlMgF_2$. This coating has an average reflectivity of 0.95% from ~250 nm to 750 nm. A stainless steel housing encloses the entire collimator and permits vacuum operation. The internal surfaces are coated with black Chemglaze to reduce stray reflections.

OCF
Target Chamber

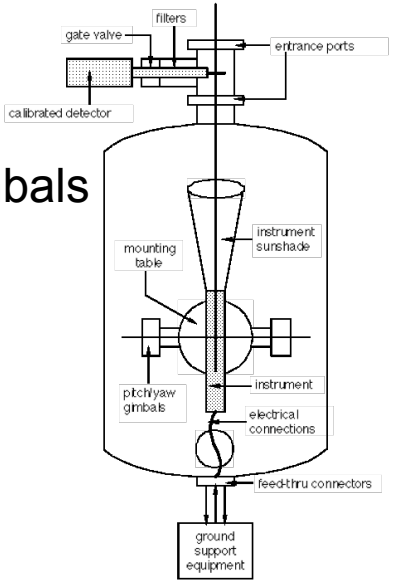

- Lines indicate motion axes of the gimbals
- SSUSI calibration required the use of a mounting fixture
- 3-axis stage will be added for GUVI
- All problems have been worked out and while a larger chamber is desirable it does not appear to be required

FPU Bench Test

Calibration bench for focal plane units (FPU);. This calibration set-up will be used independently of the OCF.

The FPU is mounted on a fixed platform that controls FPU temperature. Thermal control of the FPU platform permits heating to +40 C or cooling to -50 C to determine the thermal response of the focal plane unit. The lamp box stand can undergo translational motion along two axes orthogonal to the optical axis of the lamp box. Along any single axis, the box can move ±2.5 inches (6.34 cm) in discrete increments of 10 µm. The stand also allows vertical motion of the lamp box through ±2 inches (5.08 cm) in increments of 25 µm. The horizontal motion permits checking of individual pixels, while the vertical motion will optimize the spot size on the focal plane unit. Through the use of various pinhole screens or slits, the lamp box can project small spots having a wide range of intensities. The spot size can be made much smaller than the FPU pixel size.

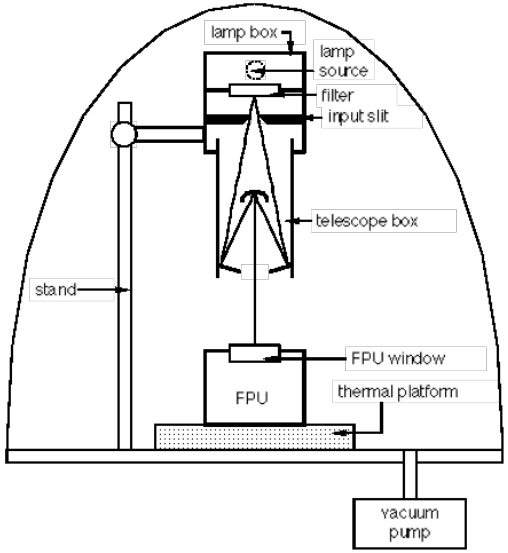

Calibration Matrix

Calibration Test	Bench	Prelim	Pre-env	Post-env
SIS Detector				
Noise Level	X			
Flat Fielding	X			
Output vs Input Count Rate	X			
Pulse Height Distribution	X			
Intrascene Dynamic Range	X			
Interscene Dynamic Range	X			
SIS				
Sensitivity vs Wavelength		X	X	X
Intrascene Dynamic Range		X		
Field of View		X	X	X
Spectral Resolution		X	X	X
Wavelength Scale		X	X	X
Off-axis Rejection		X	X	X
Out of Band Response		X		
Illumination Sensor Threshold		X		

Point Source Calibration

- **Calibration is performed by simulating a point source of known wavelength with a measured intensity**
- **This is directly transferable to the type of measurement carried out during calibration on orbit**
- **Difficulty is in translating from irradiance to radiance calibration**

What the Detector Sees

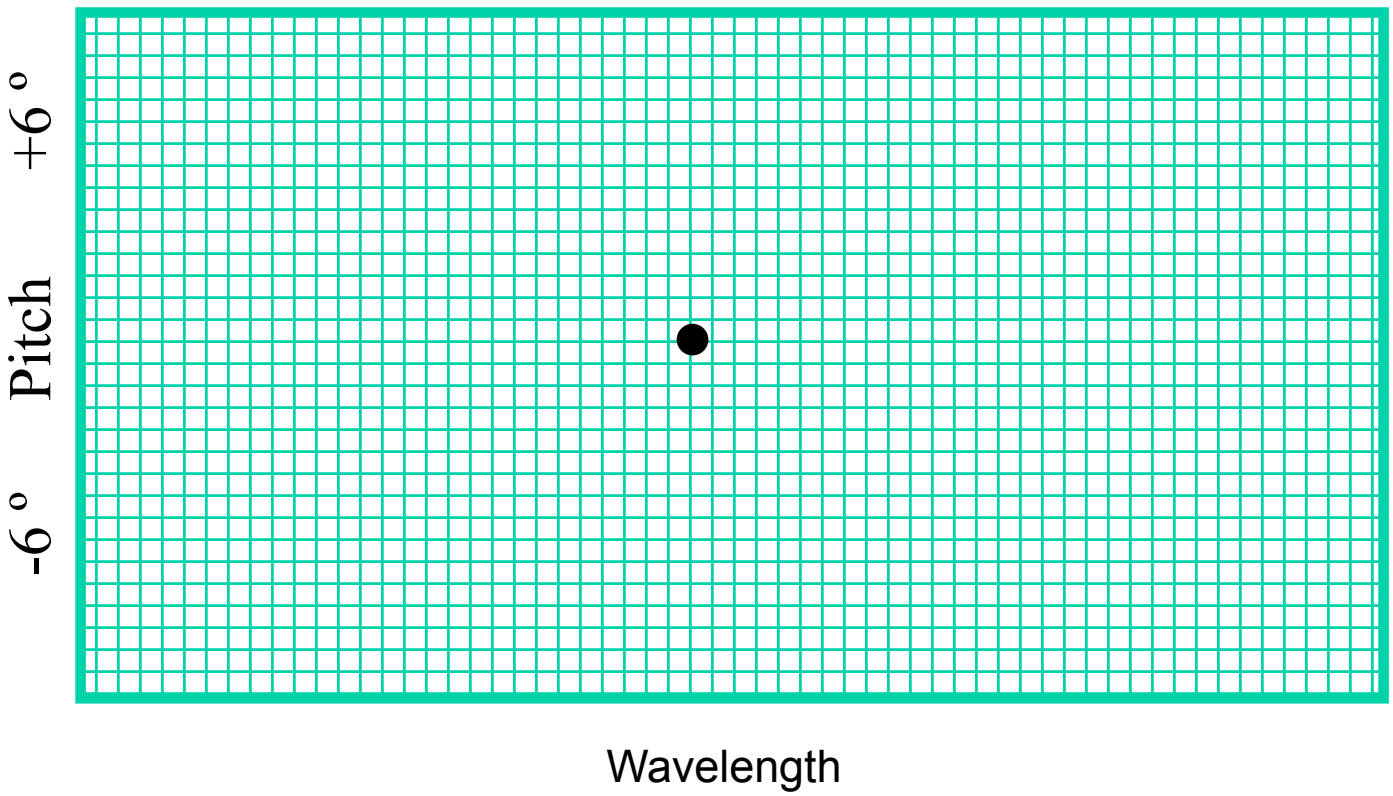

What we know from SSUSI - 1

- 1. Initial grating scatter measurements
  - Grating scatter < 0.08% of Ly α / channel in LBH wavelengths.
- 2. Shape of the scattered light.

SSUSI Measurements 2

- Point Spread function of the SIS has been measured at 30 locations. The instrument optical performance is within design limits.

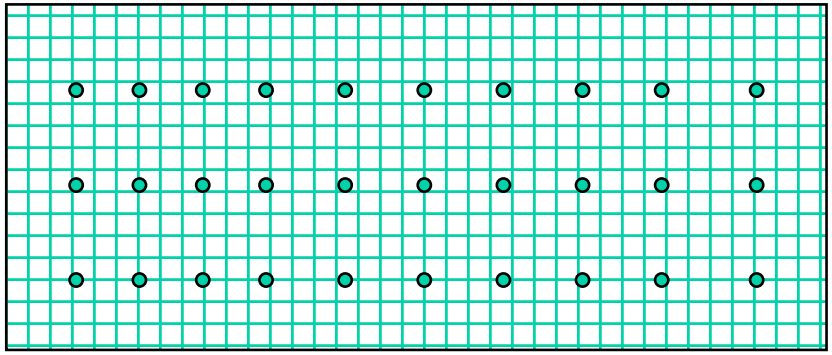

Measurements 3

- Primary and secondary detector sensitivities at all wavelengths, wide slit, nadir position of scan mirror.
- Sensitivity at other mirror scan positions.

Measurements 4

- Slit function (height and width) for wide, medium, and narrow slits.
  - **Height cannot be completely measured by the optical calibration facility, however.**

GUVI SIS Measurements to be Made

- Sensitivity at the following wavelengths
  - 1175, 1200, 1216, 1250, 1275, 1300, 1325, 1350 Å
  - 1400, 1450, 1500, 1550, 1600, 1650, 1700, 1750, 1800, 1850 Å
  - Primary, secondary detector

Current Measurement Plan 2

- Pitch angles 0°, +3°, -3°, +6°, -6°
- Slit widths - wide, medium, narrow

Current Measurement Plan 3

- Mirror scan angle sensitivity
- For range of scan angles
  - **-80, -60, -40, -20,**
  - 0, **+20, +40, +60°**
- **For detector = primary, secondary**
  - **For l = 1200 to 1800 Å by 100 Å (10 to 25 Å in some regions)**

Current Measurement Plan 4

- The scan angle measurements will be repeated at -6°, -3°, +3°, +6°

CALIBRATION REQUIREMENTS (IN FLIGHT)

- ***In-flight calibrations of GUVI must be performed.***
  - **The wavelength scale will change when a different slit is used.**
- **Wavelength scale changes must be characterizable.**
  - **The calibration must be determined in absolute terms on-orbit.**
- **The ability to obtain unattenuated observations of stars is required to validate the Spectrographic Imager calibration.**

Line of Sight on the Celestial Sphere

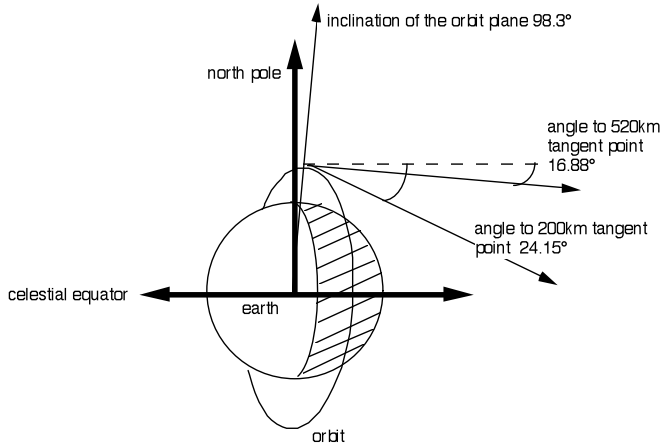

LOS at North and South Poles

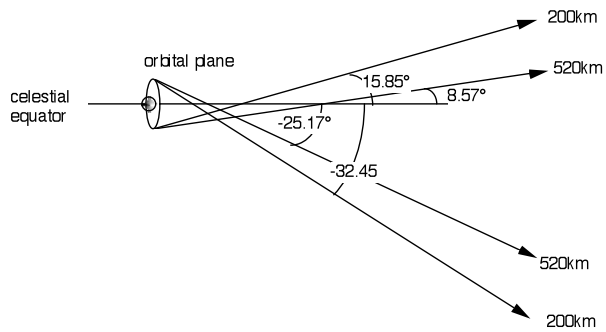

Star Calibration Sequence

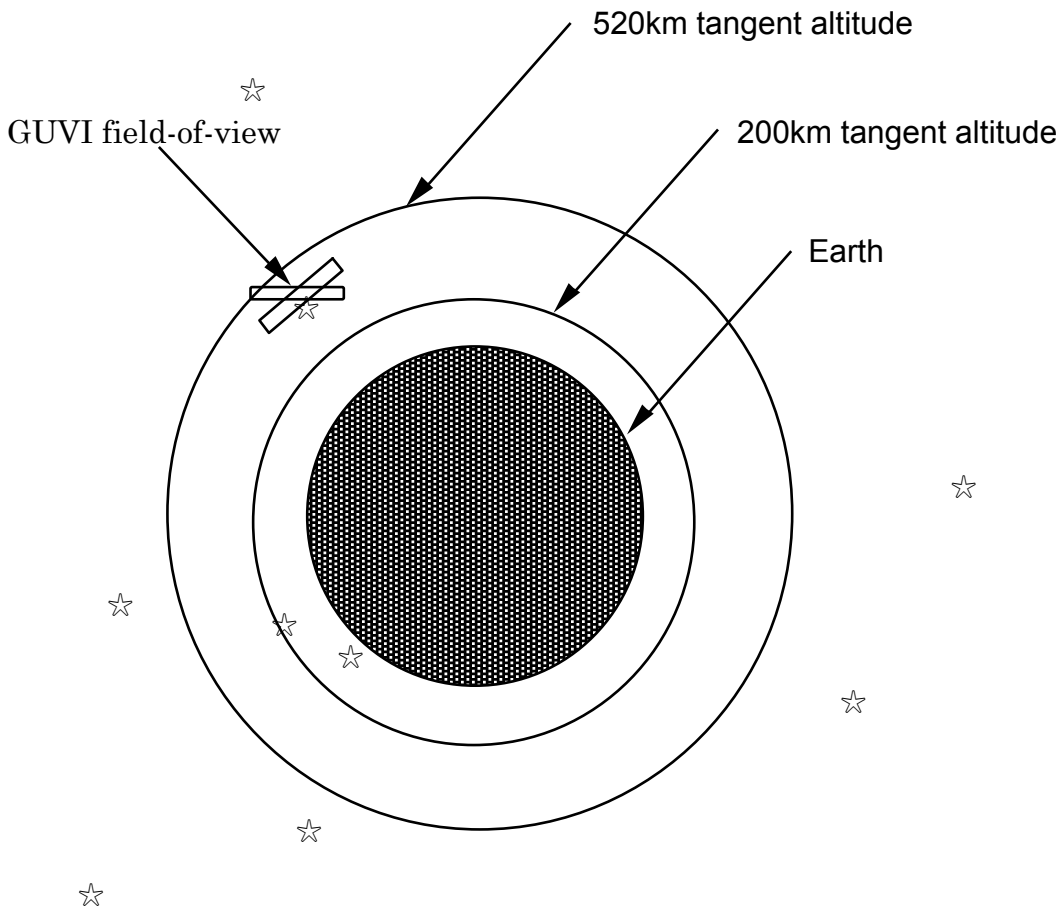

A Star in the FOV

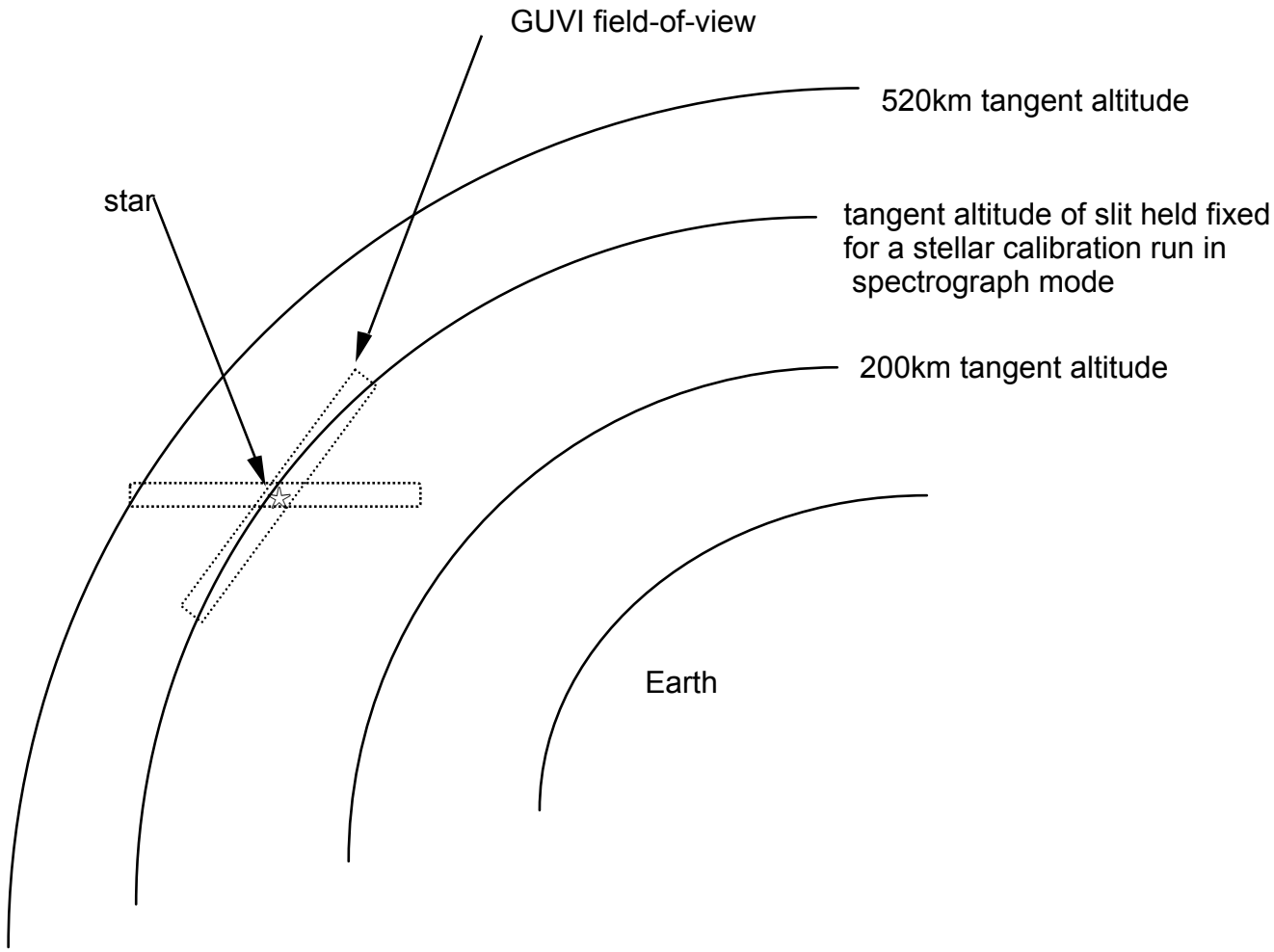

Star Motion thru FOV

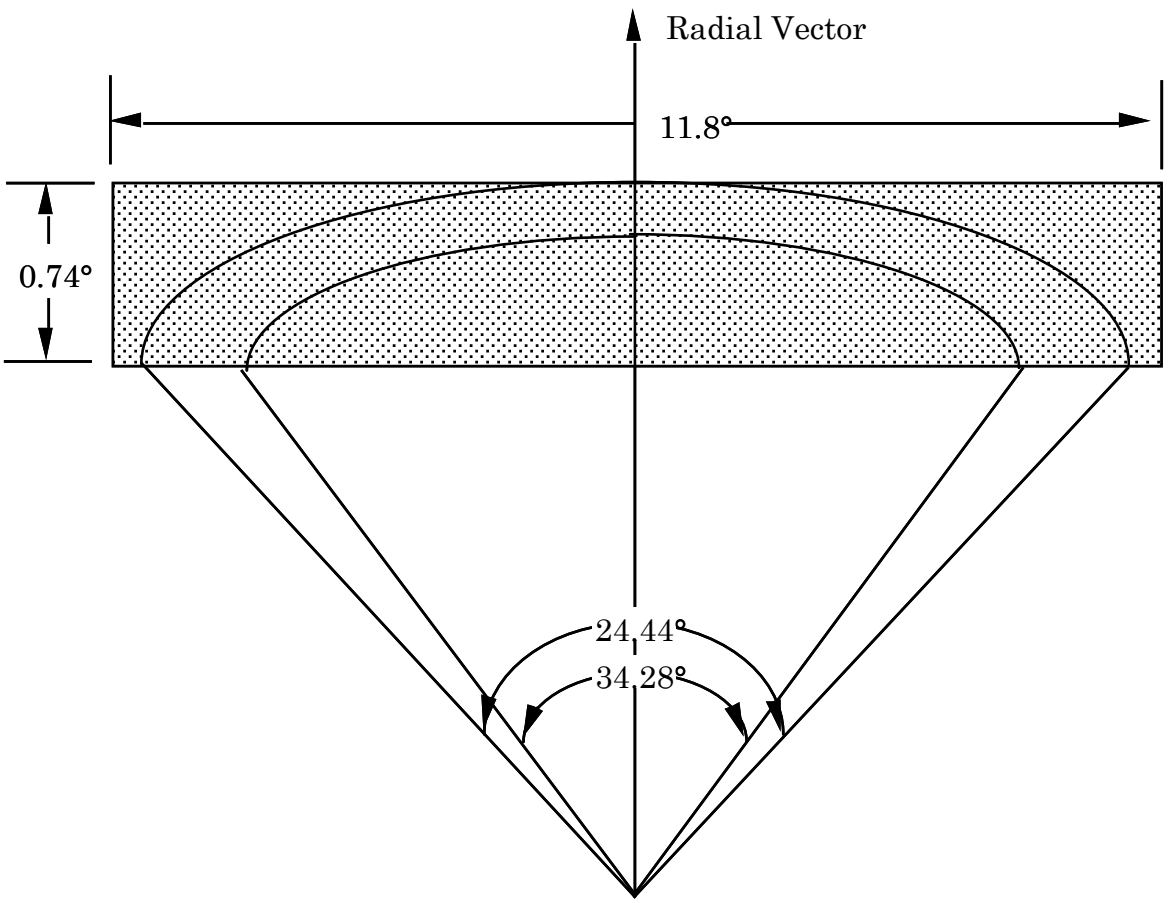

Motion of Plane of Orbit with Season

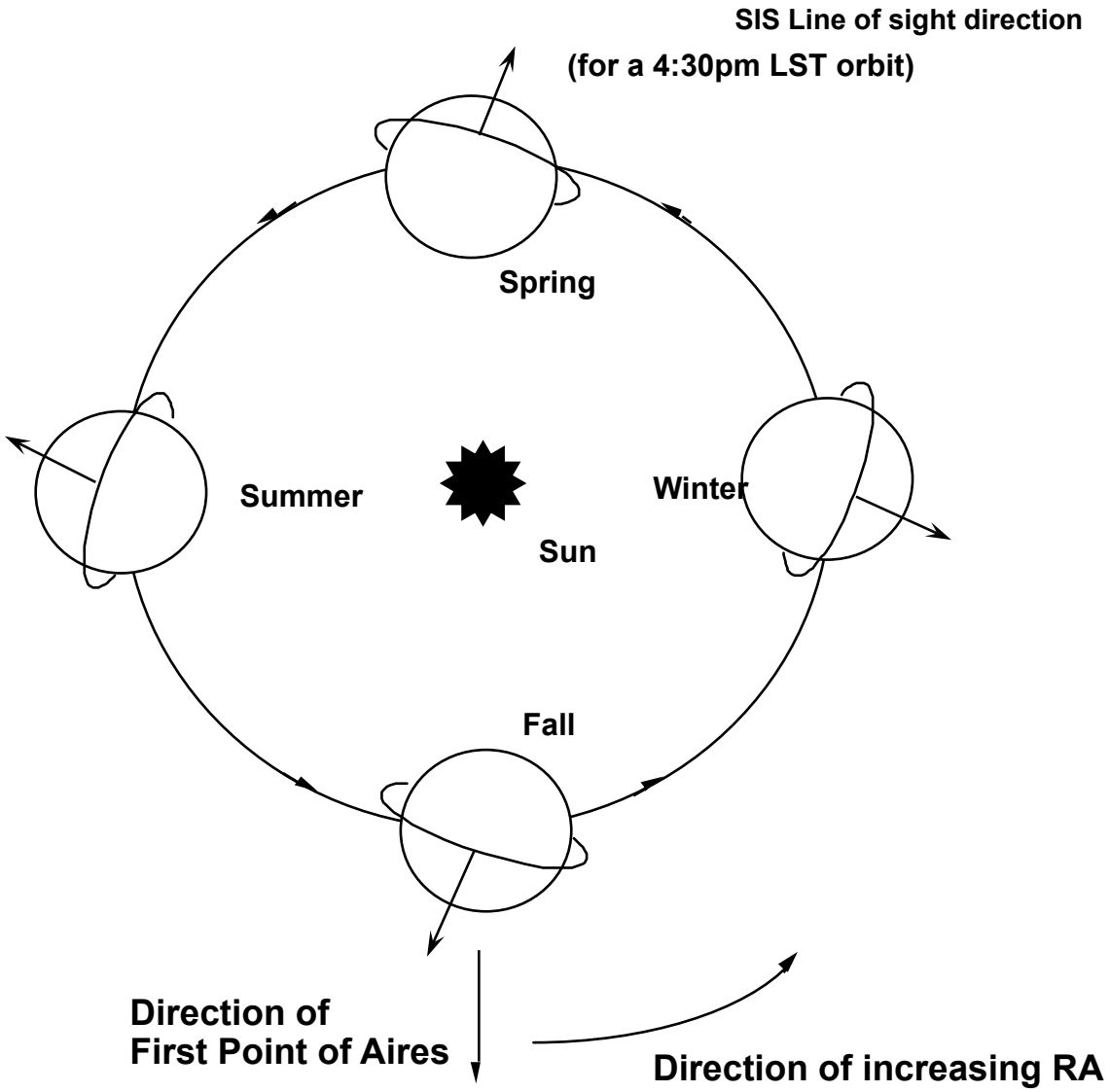

Celestial Sphere Coverage

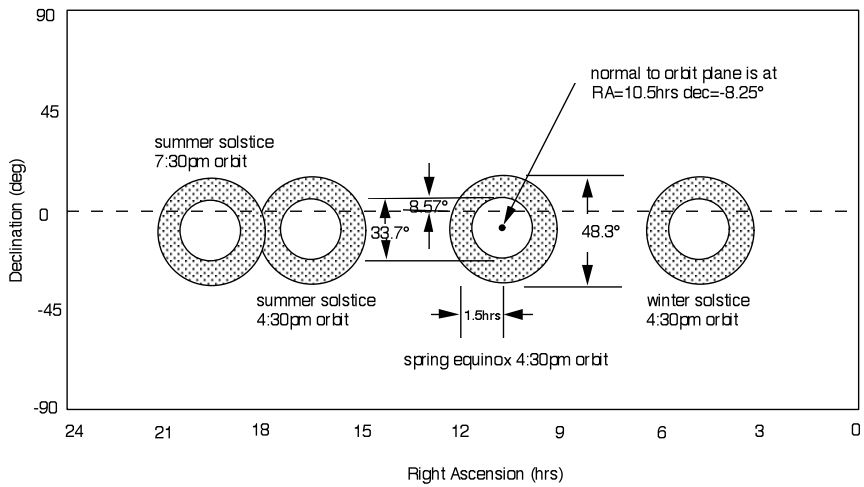

Limiting Spectral Magnitude (V) (unredened)

Spectral Type	110	120	130	140	150	160	170	180
O5	6.1	10.1	12.0	12.1	11.5	10.5	9.3	7.6
O6	5.9	9.9	11.9	12.0	11.4	10.3	9.2	7.5
O7	5.6	9.7	11.7	11.8	11.2	10.2	9.1	7.4
O8	5.4	9.5	11.5	11.6	11.1	10.1	8.9	7.3
O9	5.1	9.3	11.3	11.4	10.9	9.9	8.8	7.1
B0	4.8	9.0	11.0	11.2	10.7	9.7	8.6	7.0
B1	4.5	8.7	10.8	11.0	10.5	9.5	8.5	6.8
B2	4.1	8.4	10.5	10.7	10.2	9.3	8.3	6.7
B3	3.7	8.0	10.1	10.4	10.0	9.1	8.0	6.5
B4	3.2	7.6	9.8	10.1	9.7	8.8	7.8	6.3
B5	2.8	7.2	9.4	9.8	9.4	8.6	7.6	6.0
B6	2.3	6.7	9.0	9.4	9.1	8.3	7.3	5.8
B7	1.7	6.3	8.6	9.1	8.7	8.0	7.0	5.6
B8	1.2	5.8	8.2	8.7	8.4	7.6	6.7	5.3
B9	0.6	5.3	7.7	8.2	8.0	7.3	6.4	5.0
A0	0.0	4.7	7.2	7.8	7.6	7.0	6.1	4.7

for 10% counting statistics in 10nm bin in .1sec (from R.E. Daniels)

Partial List of UV Calibration Stars

CATALOG	NAME	SPEC	V	R.A. (1950)	DEC (1950)	LIST
HD 66811	Zeta PUP	O5Ia	2.2	08 01 49.6	-39 51 41	IUE
HD 149757	Zeta OPH	O9V	2.6	16 34 24.1	-10 28 03	IUE, ST
HD 214680	10 LAC	O9V	4.9	22 37 00.8	+38 47 22	IUE, ST
HD 38666	Mu COL	O9V	5.2	05 44 08.4	-32 19 27	IUE, ST
HD 93521		O9Vp	7.1	10 45 33.6	+37 50 04	IUE, ST
BD+75 325		O5pvar	9.6	08 04 43.2	+75 06 48	IUE, ST
BD+28 4211		Op	10.5	21 48 57.4	+28 37 34	IUE, ST
HD 10144	Alpha ERI	B3Vpe	0.5	01 35 51.2	-57 29 25	IUE
HD 35468	Gam ORI	B2III	1.6	05 22 26.9	+06 18 22	IUE
HD 120315	Eta UMA	B3V	1.9	13 45 34.3	+49 33 44	IUE, ST*
HD 121263		B2IV	2.6	13 52 24.5	-47 02 35	IUE
HD 149438	Tau SCO	B0V	2.8	16 32 45.9	-28 06 51	IUE
HD 24760	Eps PER	B0V	2.9	03 54 29.5	+39 52 02	IUE
HD 32630	Eta AUR	B3V	3.2	05 03 00.2	+41 10 08	IUE, ST
HD 3360	Zeta CAS	B2IV	3.5	00 34 10.3	+53 37 19	IUE, ST
HD 142669	Rho SCO	B2IV-V	3.9	15 53 47.5	-29 04 11	IUE
HD 34816	Lambda LEP	B0IV	4.3	05 17 16.2	-13 13 37	IUE, ST
HD 74280	Eta HYA	B3V	4.3	08 40 36.7	+03 34 46	IUE
HD 60753		B2III	6.7	07 32 08.1	-50 28 29	+IUE, ST
HD 45057		B3V	6.9	06 21 14.5	-53 18 31	IUE
HD 197637		B3	7.0	20 38 01.8	+79 15 15	IUE

see GUVI Characterization Plan for more stars